What is the Inverse Kinematics Problem?

The **inverse kinematics** problem statement:

Given a desired configuration for the tool frame, find joint angles which achieve that configuration.

This problem may have multiple solutions, a unique solution, or no solution.

Inverse Kinematics: Given $\mathbf{g}_{st}: Q \to SE(3)$ and desired configuration $\mathbf{g}_d \in SE(3)$, solve $\mathbf{g}_{st}(\theta) = \mathbf{q}_d \in Q$

Traditionally, inverse kinematic solutions are separated into two classes:

1) **Closed-form solutions** allow for fast and efficient calculation of the joint angles which give a desired end-effector configuration. Most industrial manipulators have closed-form solutions.
   - Algebraic methods (equation manipulation and solving)
   - Geometric methods (write kinematics in terms of spatial geometries, and solve)
2) **Numerical solutions** rely on an interactive procedure to find the joint angles which give a desired end-effector configuration.
   - Iterative methods
   - Continuation methods

Example: IK for the ME Arm V3.0

The MeArm v3.0 is a small open-source robot arm with **4 servos**:
Effective positioning DOF = 3 (Base + Shoulder + Elbow)

Parallel linkage at the shoulder

- A four-bar parallel linkage couples the shoulder servo to the forearm.
- Key effect: **forearm remains parallel to the upper arm throughout its range of motion**, regardless of shoulder angle.
- This **kinematic constraint** simplifies the geometry. The elbow joint angle ψ sets the angle of the forearm *relative to the upper arm*.

Joint	DOF	Role
Base	θ_a	Rotate arm about vertical axis
Shoulder	θ_b	Raise and lower upper arm in vertical plane
Elbow	θ_c	Bend forearm relative to upper arm

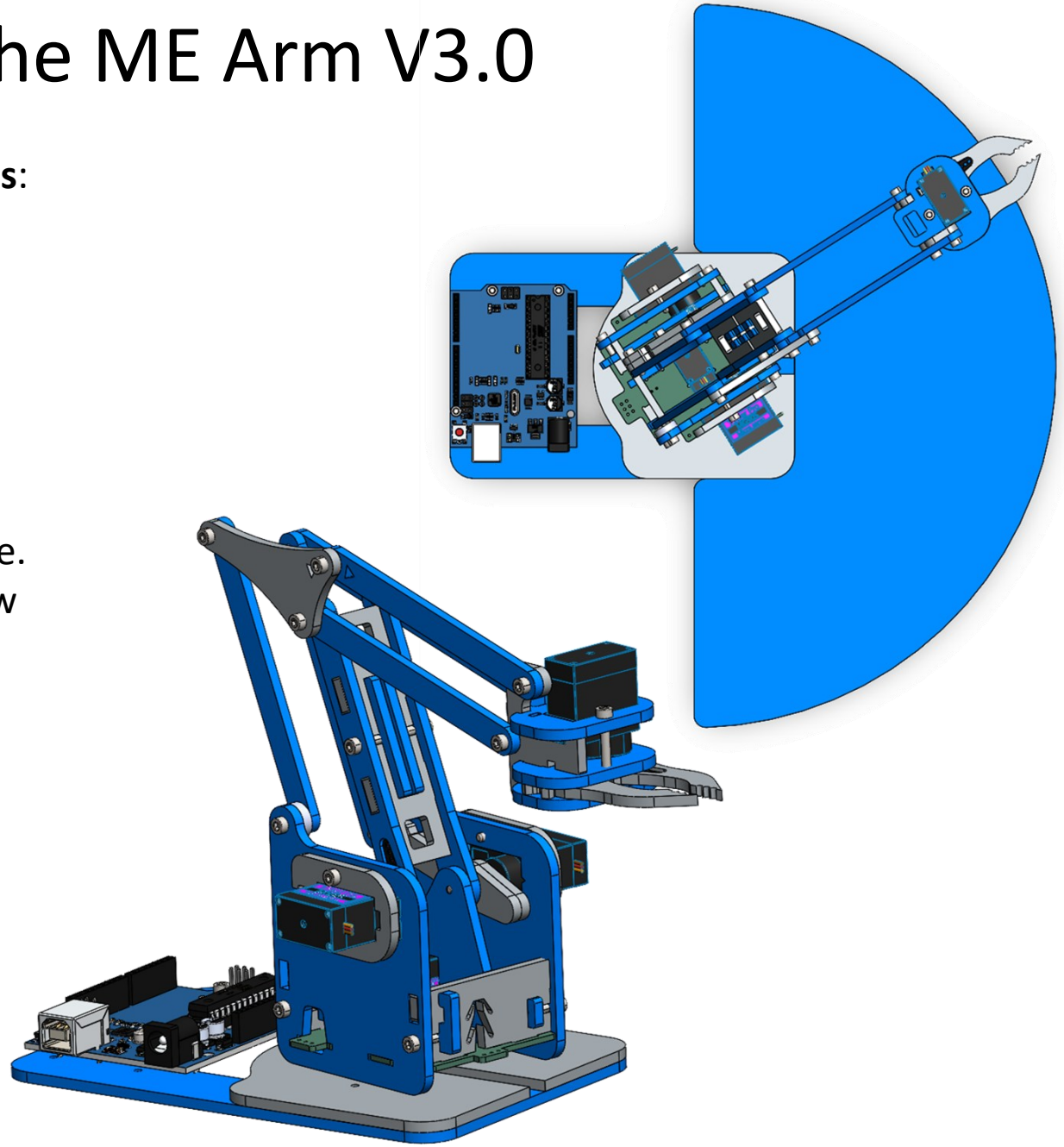

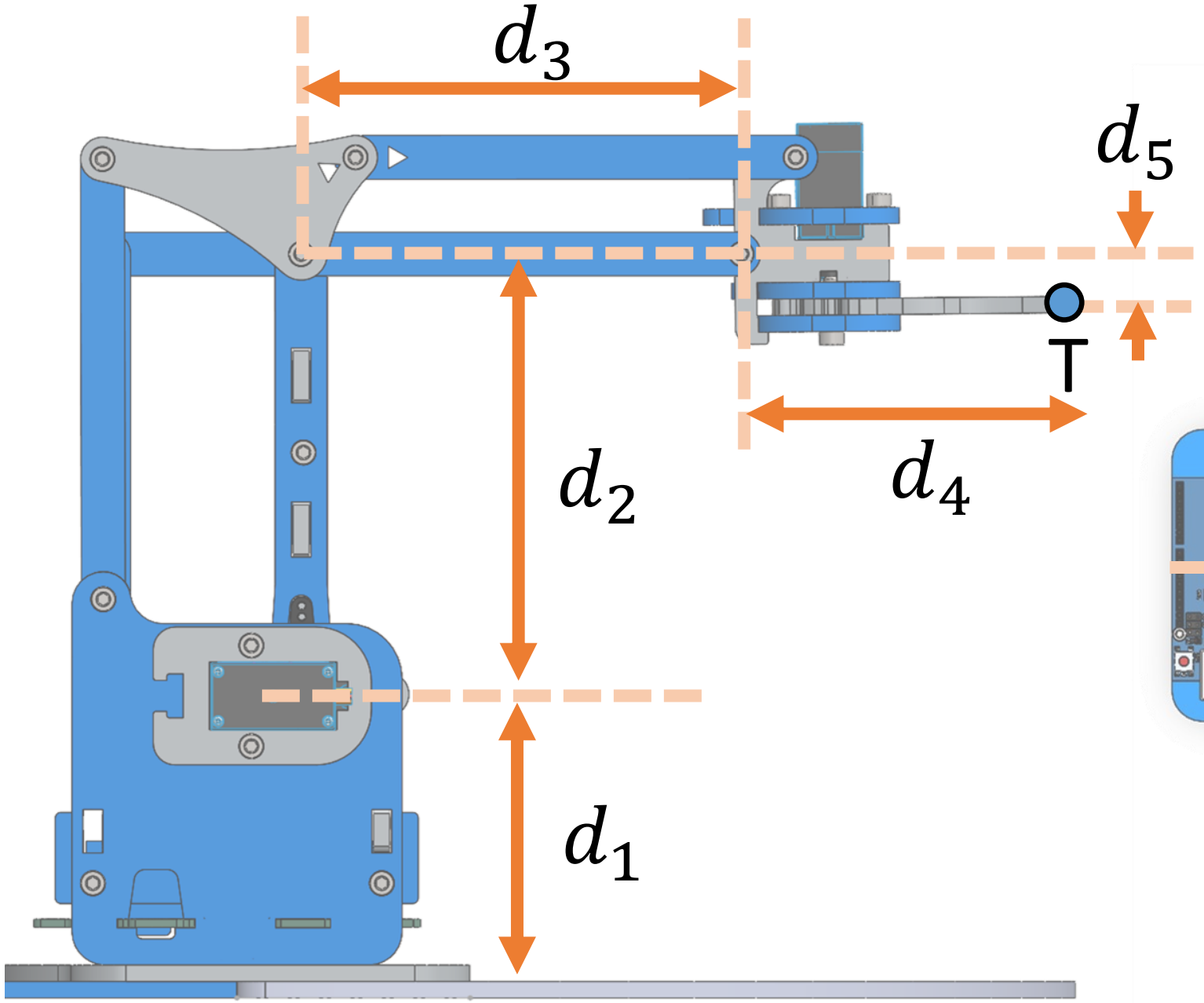
d_3
d_5
T
d_2
d_4
d_1

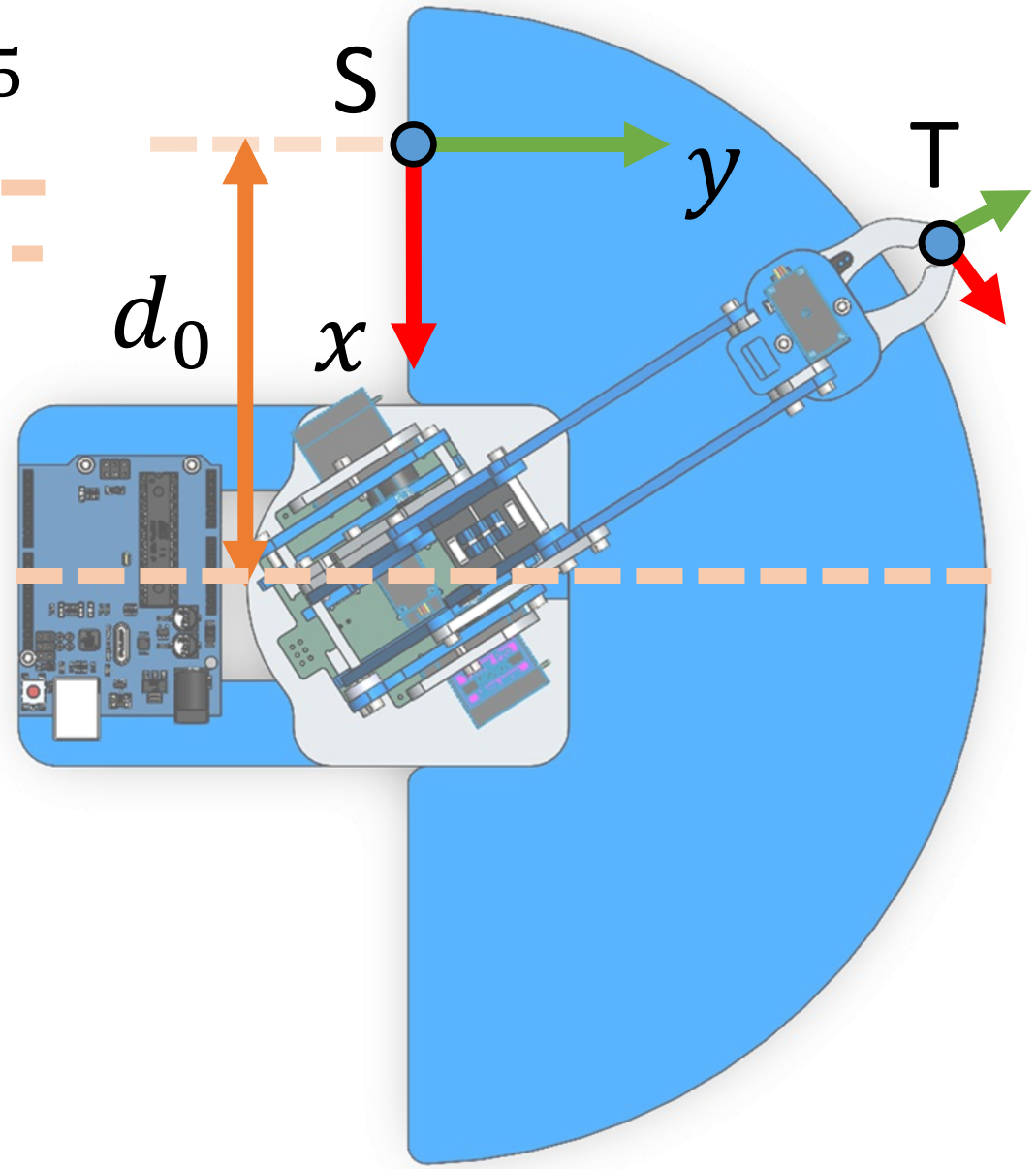
S
y
T
d_0
x

Base Angle (Coordinate System Decomposition)

Place a world origin at the base rotation axis with the ground plane = *xy*-plane.

Cylindrical decomposition: for any Cartesian target (x, y, z) we can collapse to a 2D planar problem in the vertical plane
Effective positioning DOF = 3 (Base + Shoulder + Elbow)

$$\theta_a = atan2(x, y) \qquad (base\ rotation)$$

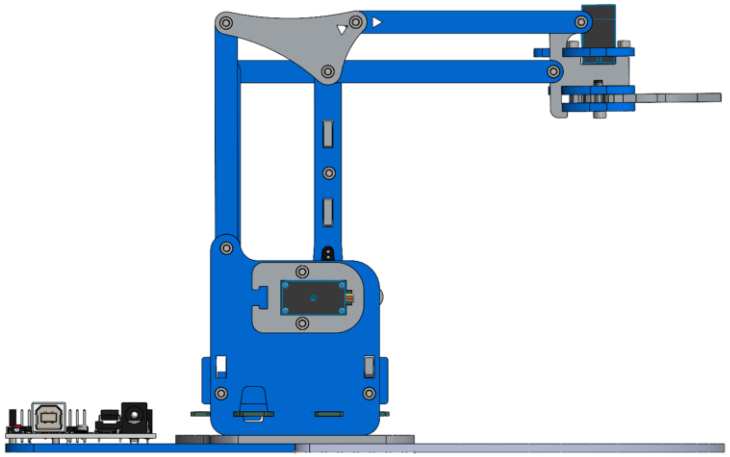

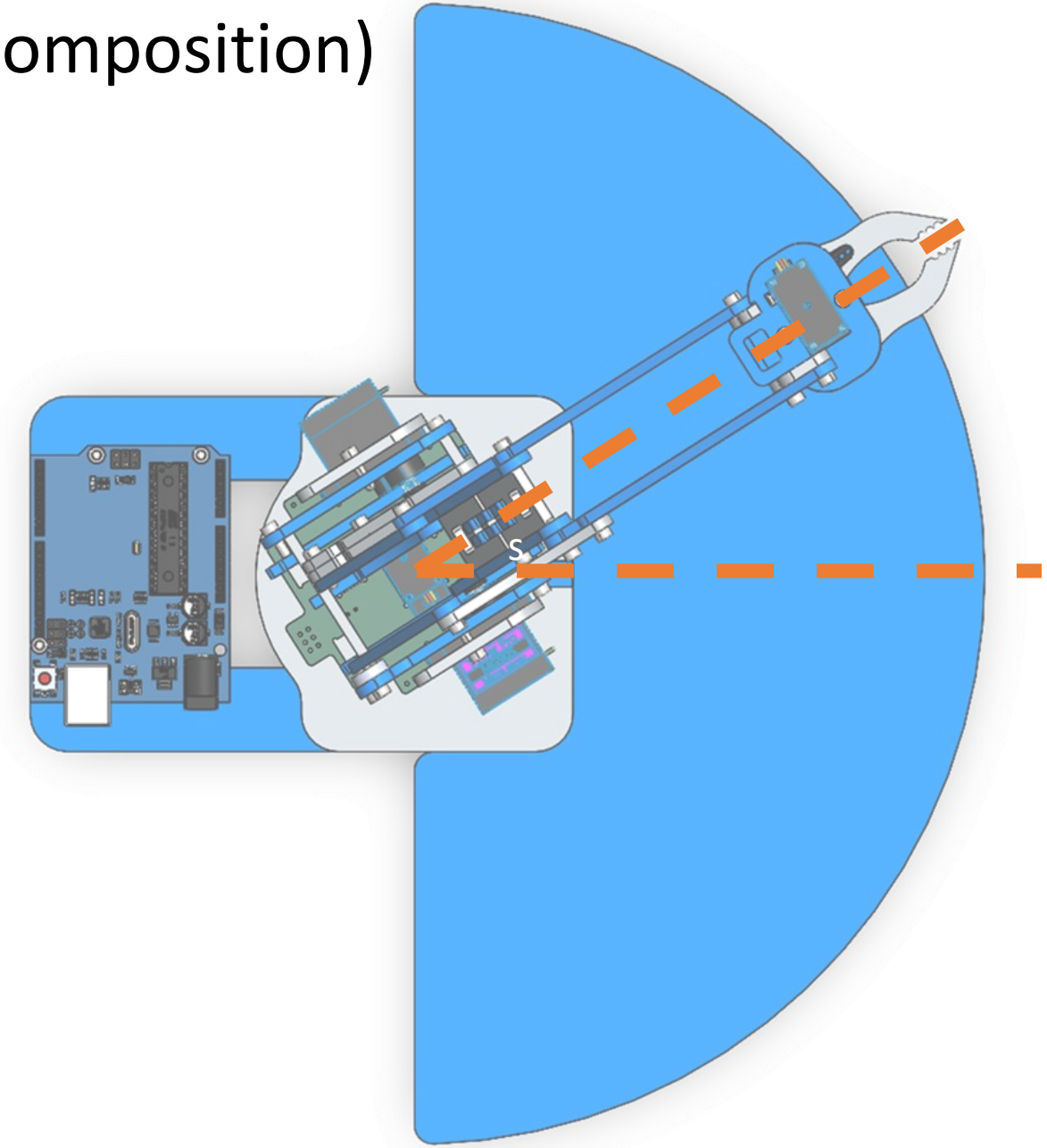

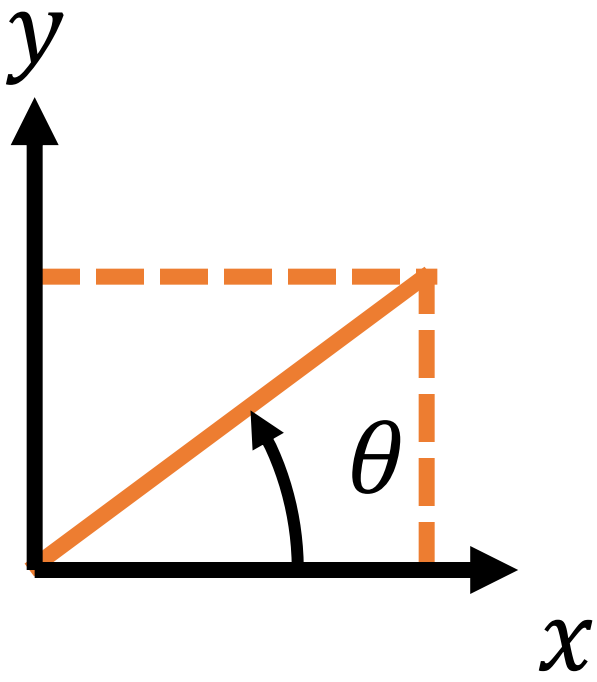

$$\theta = \operatorname{atan}\left(\frac{y}{x}\right)$$

$$\theta = \operatorname{atan2}(y, x)$$

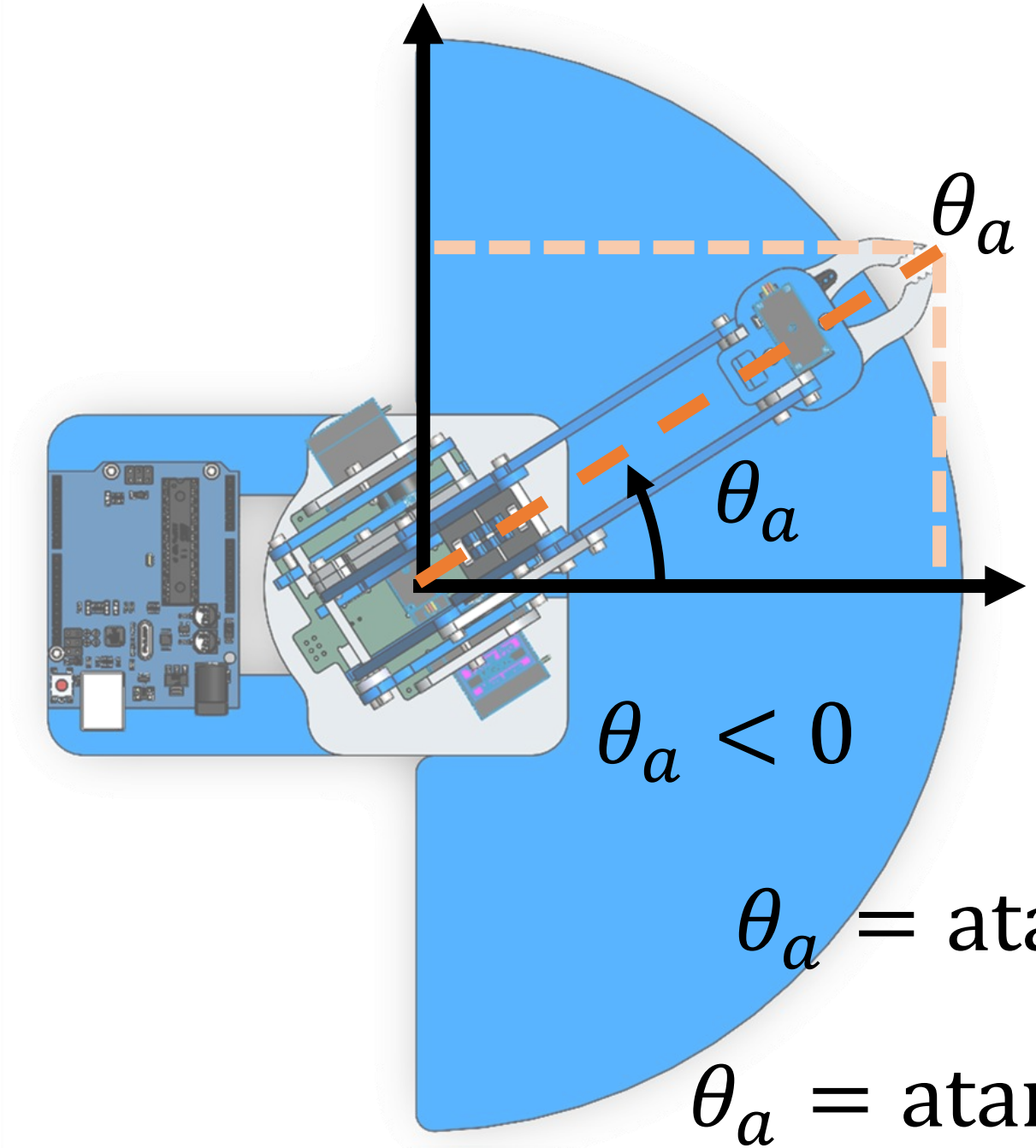

$$\theta_a = \operatorname{atan}\left(\frac{x}{y}\right)$$

$$\theta_a = \operatorname{atan2}(x, y)$$

Shoulder / Elbow

Define radial distance and height

$$r = \sqrt{x^2 + y^2} - d_5$$
$$\mathrm{h} = z - d_5 - b_z$$

The arm reaches point (r, z) using the two-link shoulder chain

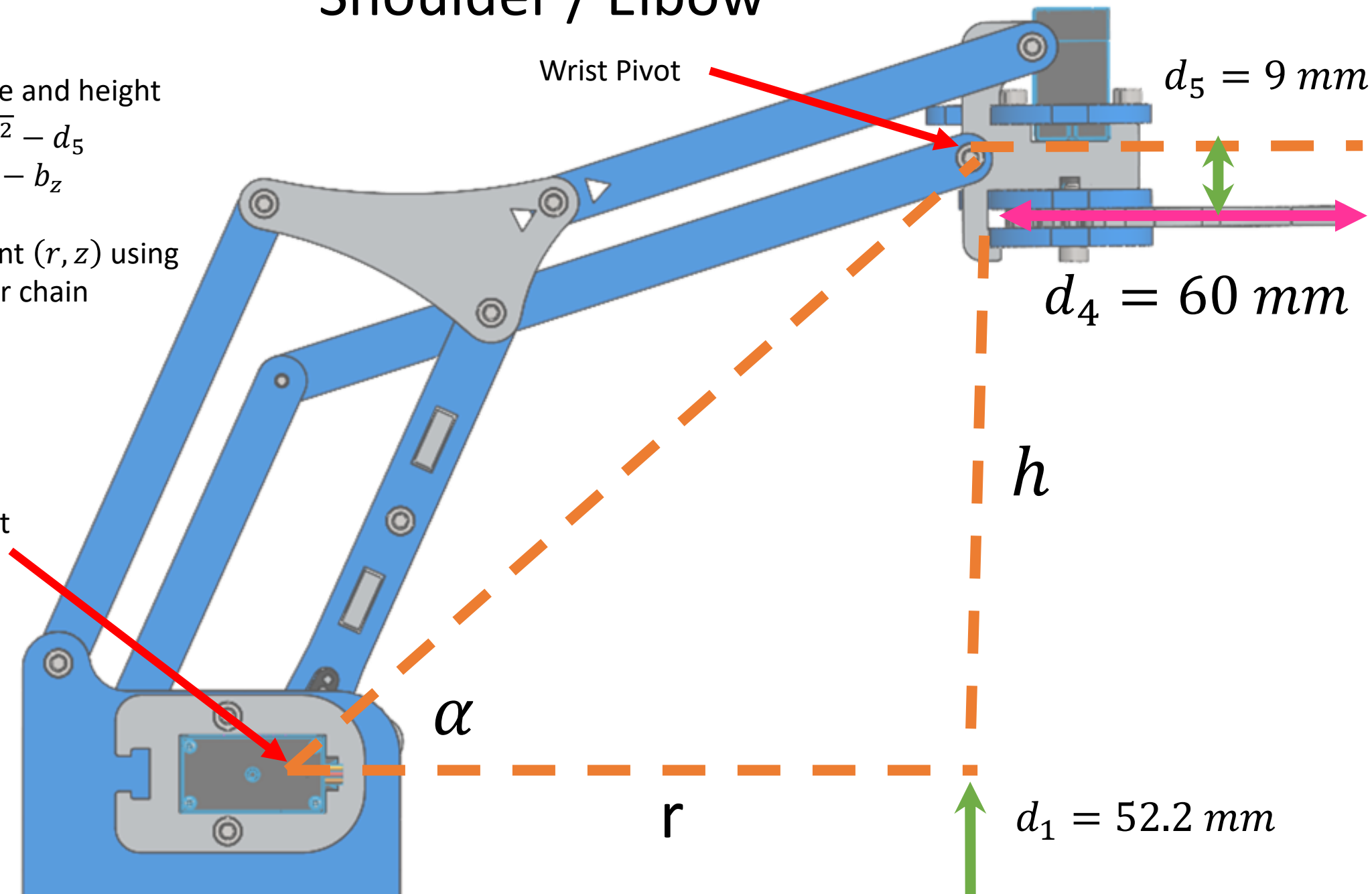

3.3.1 Explicit Inverse Kinematics

To solve:

- First, define the angle from the horizontal to the shoulder pivot:

$$\alpha = atan2(h, r)$$

- Next, define the inside angle

$$d = \sqrt{r^2 + z^2}$$

$$\beta = \text{acos}\left(\frac{\frac{d}{2}}{L}\right)$$

$$\beta = \text{acos}\left(\frac{d}{2L}\right)$$

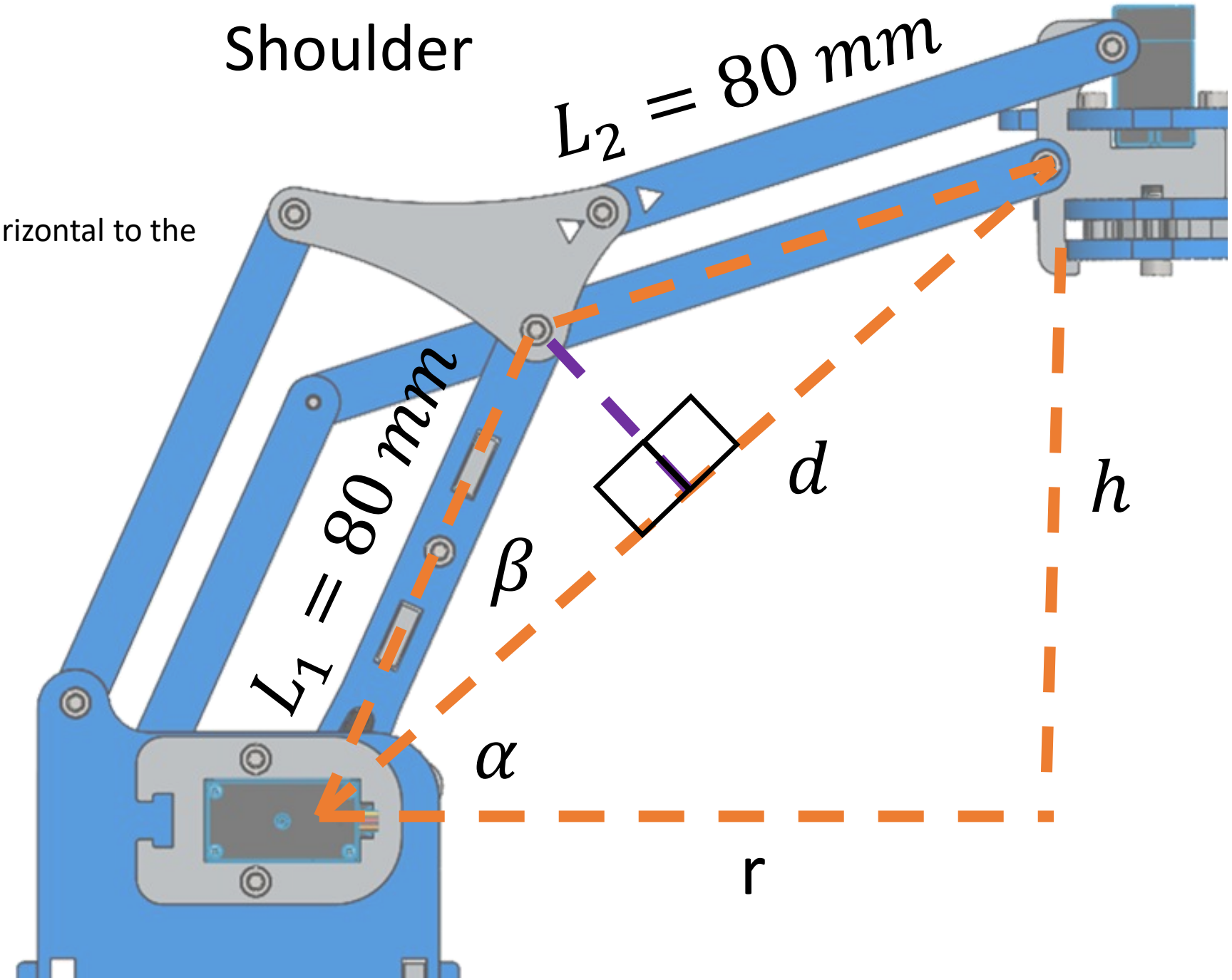

Multiple Solutions: Elbow Angle (via Law of Cosines)

Alternatively, **Law of cosines** applied to the triangle formed by L_1, L_2 *and* d:

Law of cosines:

$$c = \sqrt{a^2 + b^2 - 2ab \cdot cos(\gamma)}$$

$$L_2^2 = L_1^2 + d^2 - 2L_1 \mathrm{d} \cdot \cos(\beta)$$

$$\beta = \pm \mathrm{acos}\left(\frac{L_2^2 - L_1^2 - d^2}{2L_1 \mathrm{d}}\right)$$

$$\beta = \pm \mathrm{acos}\left(\frac{d}{2\mathrm{L}}\right)$$

Pick the solution that makes physical sense.

- In this case:

$-\beta$ gives a shoulder pointing down

$+\beta$ gives shoulder pointing up

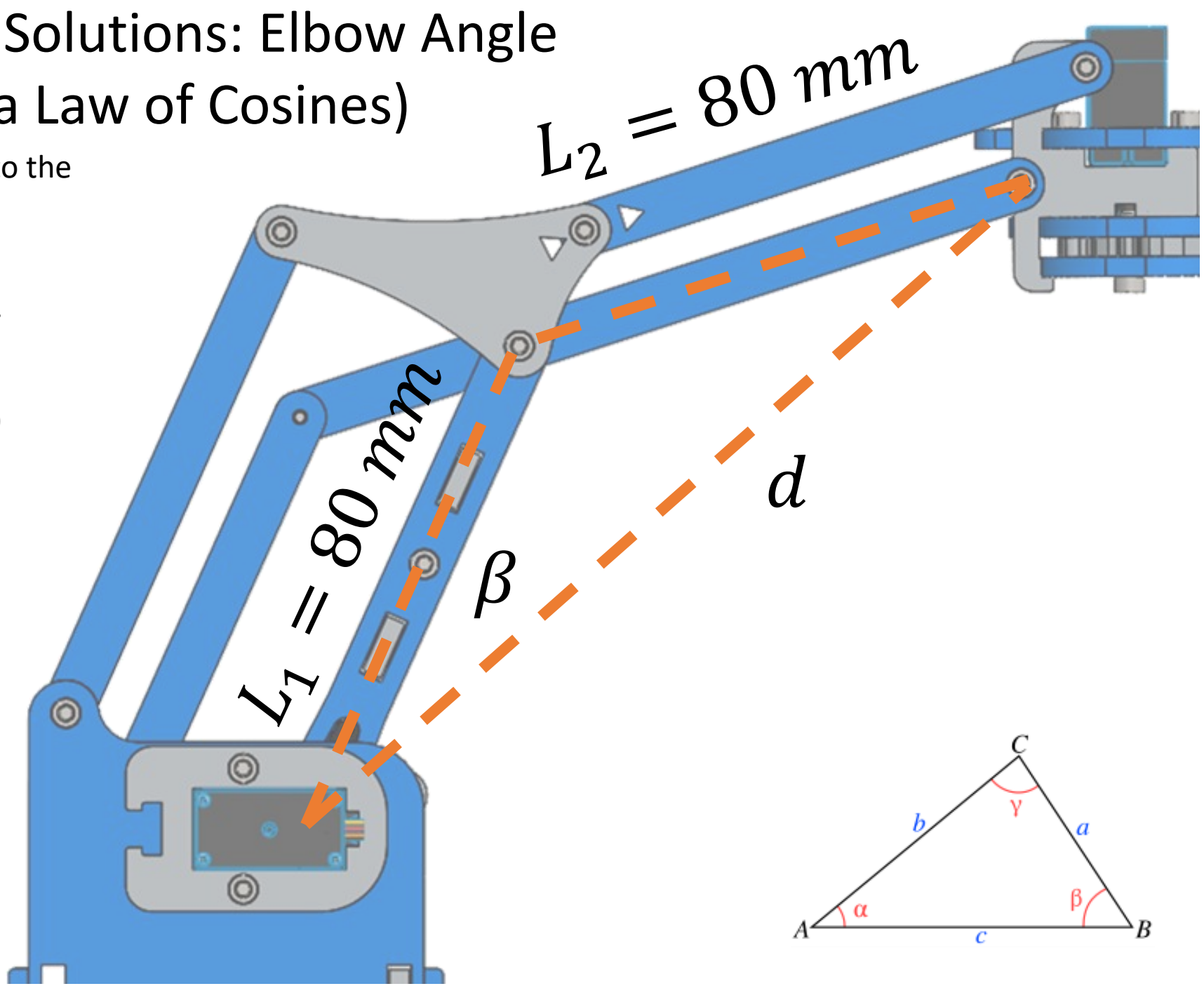

Shoulder Angle (Parallelogram)

Now we can find the angles ϕ and ψ:
This is easier to visualize with a parallelogram

$$\phi = \alpha + \beta$$
$$\psi = \alpha - \beta$$

Note: In our forward kinematics, we have set up equal to 0 (vertical arm pointing up) so we need to adjust by $\pi/2$ to convert to the FK shoulder angle:

$$\theta_b = \frac{\pi}{2} - (\beta + \alpha)$$
$$\theta_b = \frac{\pi}{2} - \phi$$

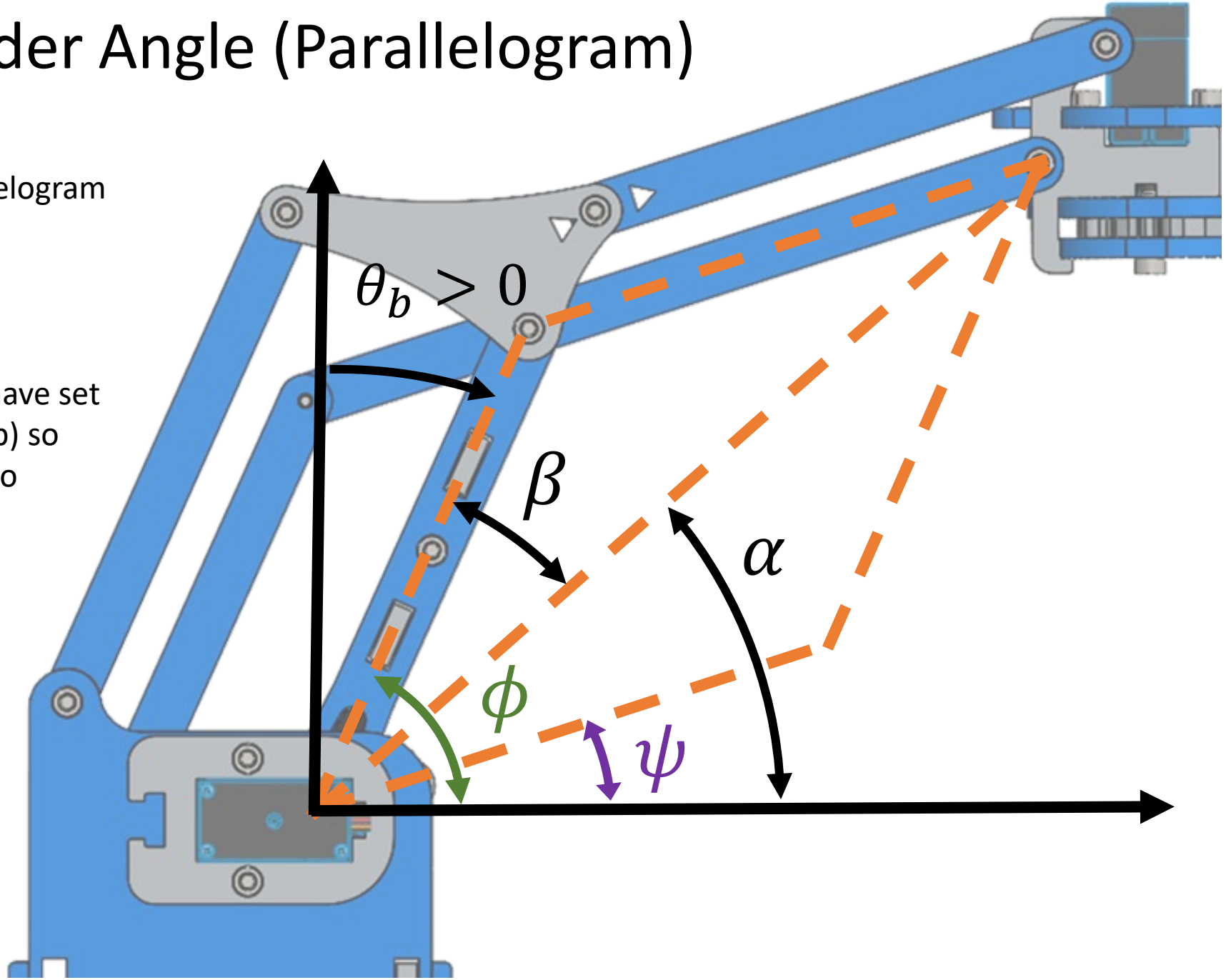

Elbow Angle

Note: This illustrates two relevant angles to solve:

θ_3: *servomotor command angle*

θ_c: *FK relative rotation angle*

Via a few angle theorems, you can find:

$$\theta_3 = \alpha + \beta$$

$$\theta_c = -\left(\frac{\pi}{2} - \gamma\right) = \gamma - \frac{\pi}{2}$$

Where **Law of cosines** can be applied to the triangle formed by L_1, L_2 *and* d to find γ (assuming $L_1 = L_2$) :

$$c = \sqrt{a^2 + b^2 - 2ab \cdot cos(\gamma)}$$

$$d^2 = 2L^2 - 2\mathrm{L} \cdot \cos(\gamma)$$

$$\gamma = \pm \mathrm{acos}\left(\frac{d^2 - 2L^2}{2\mathrm{L}}\right)$$

In this case only + solution makes physical sense...

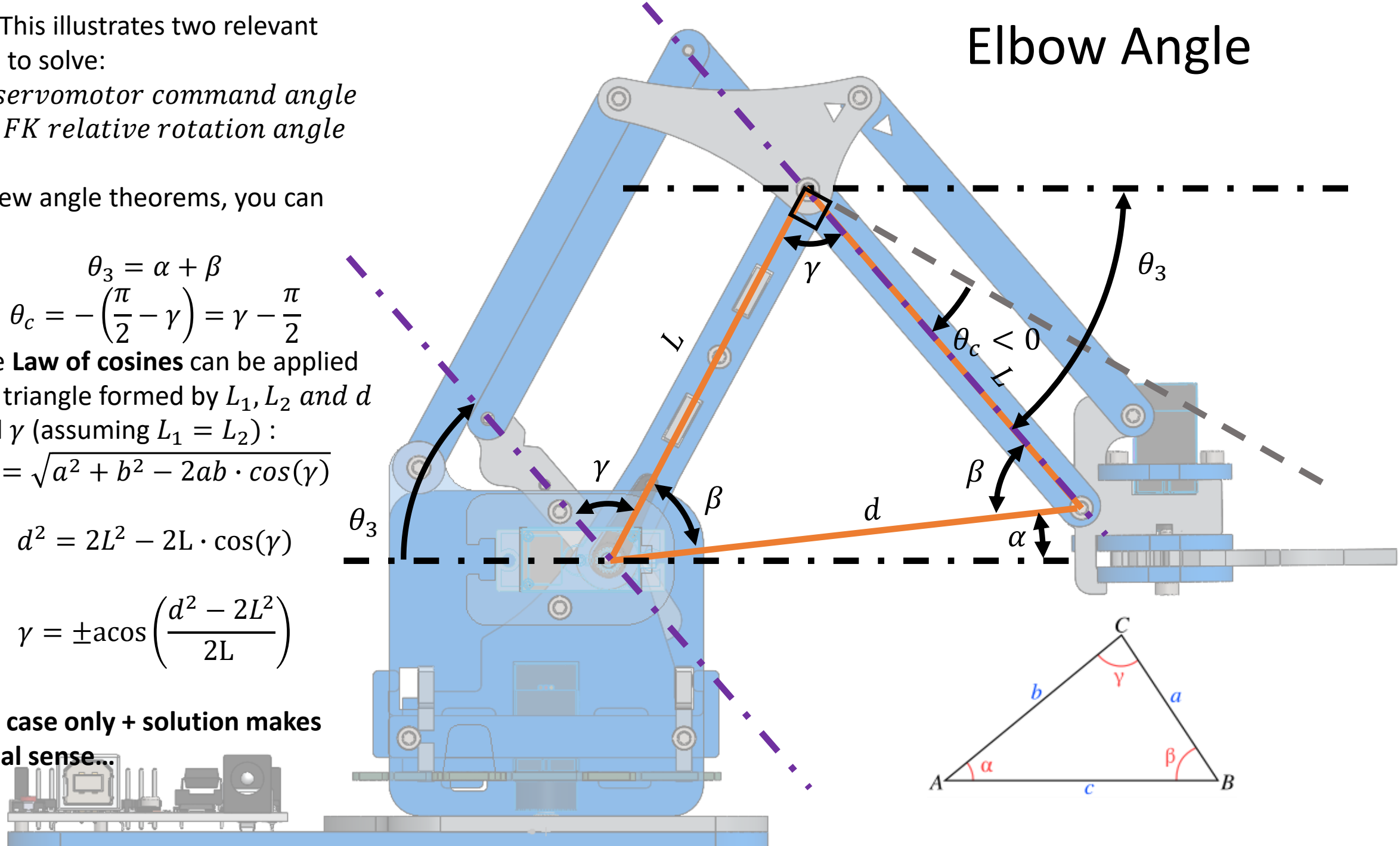

Summary:

Given target $T = (x_t, y_t, z_t)$:

$$\boxed{\theta_a = atan2(x, y)}$$

$$r = \sqrt{x^2 + y^2} - \mathrm{d}_4, \qquad \mathrm{h} = z - d_5 - d_1$$

$$d = \sqrt{r^2 + h^2}$$

$$\alpha = atan2(h, r), \qquad \beta = \mathrm{acos}\left(\frac{d}{2L}\right), \qquad \phi = \alpha + \beta$$

$$\boxed{\theta_b = \frac{\pi}{2} - \phi}$$

$$\gamma = \pm\,\mathrm{acos}\left(\frac{d^2 - 2L^2}{2\mathrm{L}}\right)$$

$$\boxed{\theta_c = \gamma - \frac{\pi}{2}}$$